DRAWING NUMBER/SHEET NUMBER
F2469

REMOVE ALL BURRS & SHARP EDGES IF IN DOUBT ASK! 3RD ANGLE PROJECTION

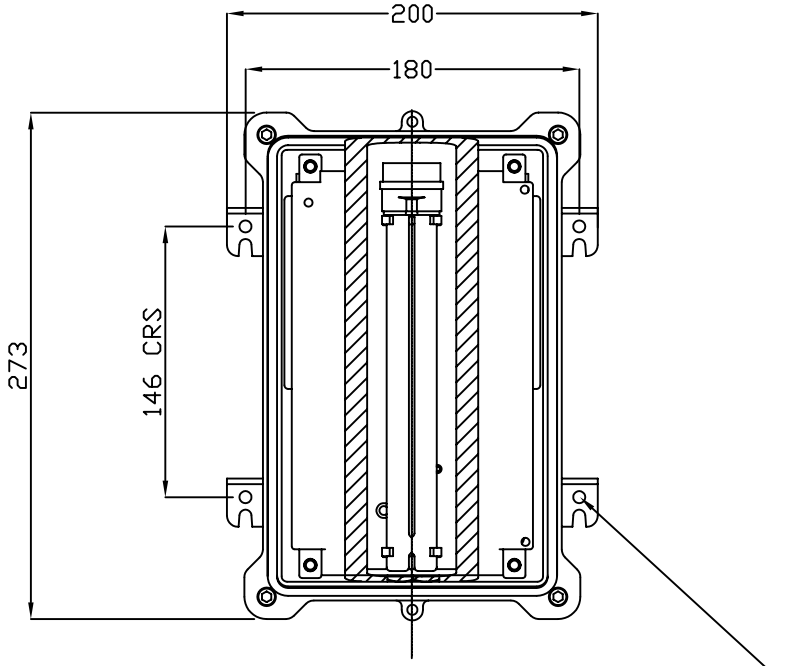

4off–6.5mm Dia Mounting Holes

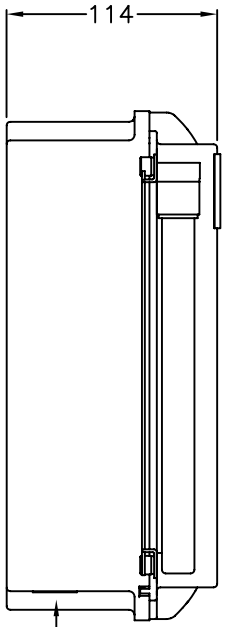

VIEW 'A'

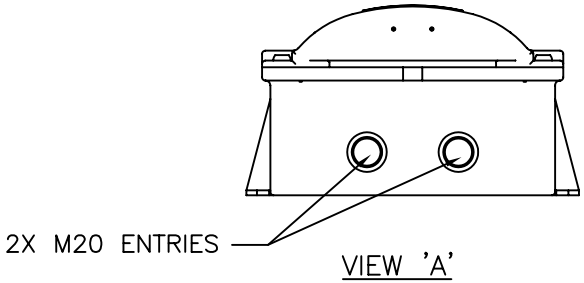

VIEW 'A'

NOTES:

PRODUCT PROTECTION: EEx em II T4
CERTIFICATE No: SIRA03ATEX3556
CODING: Ex II 2GD EEx em II (See table for rating)
TERMINALS : UP TO 6MM SQ.
CABLE ENTRIES : TWO X M20 ENTRIES
INGRESS PROTECTION : IP66/67
ENCLOSURE : POLYCARBONATE
GASKET: SILICONE
EXTERNAL FASTNERS : STAINLESS STEEL

WEIGHT:

VL114E : 2.5KG

LUMINAIRE IS NON–MAINTAINED AS STANDARD

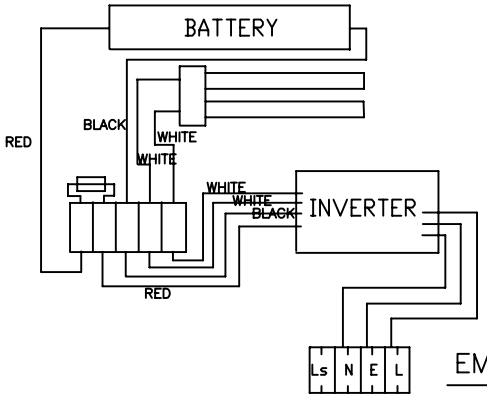

EMERGENCY WIRING DIAGRAM

CATALOGUE REF. PATE/118/CF/EM	'T' RATING	AMBIENT TEMPERATURE RANGE	SUPPLY VOLTAGE
NON–MAINTAINED	T4	–15C TO +60C	220–254V AC 50/60 HZ
	T5	–15C TO +40C	
	T6	–15C TO +25C	
MAINTAINED	T3	–15C TO +40C	

DRAWN	Slee
CHECKED	Slee
APPROVED	Slee
DATE	30.08.06

REF. DRGS.–

DCF No	MOD BY	CHANGE	ISSUE	DATE

WITHOUT OUR PERMISSION THIS DRAWING, WHICH IS OUR COPYRIGHT, MAY NOT BE REPRODUCED OR MADE AVAILABLE TO THIRD PARTIES.
AUTHORISATION IS GIVEN TO ..... TO REPRODUCE THIS DRAWING FOR INTERNAL PURPOSES ONLY.

MATERIAL: Material
TOLERANCE:
FINISH: Finish
SURFACE ROUGHNESS:
DIMS. IN MM
SCALE –

Victor Lighting

Victor Lighting
388 Hillington Road,
Glasgow G52 4BL
Scotland
Tel:0141 810 9644 Fax:0141 810 9642

TITLE
VL114E PATHFINDER
GA DRAWING

DRAWING NUMBER/SHEET NUMBER
2469 1 OF 1