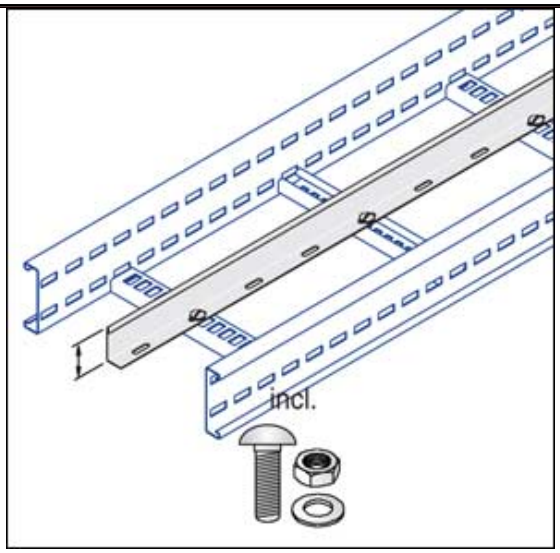

Part No.	Finish	Length	Weight
U/DIV30	HG	1.5M	0.75
U/DIV70	HG	1.5M	1.23
U/DIV30	SS	1.5M	0.00
U/DIV70	SS	1.5M	0.00

Project: A

Architect / Engineer: B

Date: C **Phone:** D

Contractor: E

Address: F

Notes 1: G

Approval Stamp: